Power Transducer Series

MULTI POWER MONITOR
(4 digital displays)

MODEL **53U**

MODEL & SUFFIX CODE SELECTION

53U–1❑❑❑–AD4❑

MODEL

CONFIGURATION
1 : Single-phase / 2-wire and 3-wire, 3-phase / 3-wire and 4-wire

INPUT
1 : 480V AC / 1A
2 : 480V AC / 5A

CONTACT INPUT
0 : None *1
1 : 24V DC *2
2 : 110V DC *2
*1. 'External Interface' codes 1, 4 and 5 Not selectable.
*2. 'External Interface' codes 2, 3, 6, 7, 8 and 9 Not selectable.

EXTERNAL INTERFACE
1 : Modbus, Do × 1, Di × 1
2 : 4 – 20mA DC × 4
3 : 1 – 5V DC × 4
4 : 4 – 20mA DC × 2, Do × 1, Di × 1
5 : 1 – 5V DC × 2, Do × 1, Di × 1
6 : 4 – 20mA DC × 2, Do × 2
7 : 1 – 5V DC × 2, Do × 2
8 : Modbus, Do × 3
9 : Do × 4

AUXILIARY POWER SUPPLY
AD4 : 100 – 240V AC / 110 – 240V DC (universal)

OPTIONS
/H : High accuracy (voltage/current: ±0.2%, energy: ±0.5%)

ORDERING INFORMATION

Specify code number. (e.g. 53U-1211-AD4)

RELATED PRODUCTS

- PC configurator software (model: 53UCFG)
- PC Recorder Light software for the 53U (model: MSR128LUx)
  Software downloadable at M-System's web site: http://www.m-system.co.jp

A dedicated cable is required to connect the module to the PC. Please refer to the internet software download site or the users manual for the PC configurator for applicable cable types.

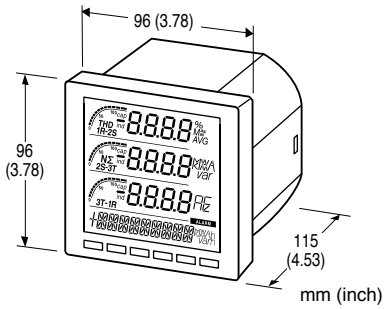

Functions & Features

- Measures simultaneously several variables of a heavy-current power system: current, voltage, active, reactive and apparent power, active and reactive energy, power factor, frequency, etc.
- All measured values, counter values, display mode, setting data are stored in the non-volatile memory at the power off
- Conversion factors, system configuration, interval times are programmable using the front keys
- Open collector output for alarm or energy count

Typical Applications

- Multi-functional power monitor incorporated in an electric device: saves space, wiring works, and cost

GENERAL SPECIFICATIONS

Construction: 96-mm square (1/4 DIN size) panel flush mounted
Degree of protection
Front panel: IP 50
Terminal block, housing: IP 30
Connection
Voltage input: Connector type terminal block (applicable wire size≤2.5 dia, 0.5 – 3.5 mm²)
Current input: Screw terminal block (applicable wire size≤2.4 dia, 0.5 – 3.5 mm²)
Output, power: Connector type terminal block (applicable wire size≤2.4 dia, 0.5 – 2.5 mm²)
Configuration: Single phase/2-wire and 3-wire, 3-phase/3-wire balanced/unbalanced load, 3-phase/4-wire balanced/unbalanced load
Housing material: Flame-resistant resin (gray)
Isolation: Voltage input to current input to contact input to network interface or configurator jack or analog output to contact output* to power
*Between each contact output except for External Interface code 8.

Measured variables
Voltage: 1 – N, 2 – N, 3 – N, 1 – 2, 2 – 3, 3 – 1
Current: 1, 2, 3, N
Average current: 1, 2, 3
Active / reactive / apparent power: 1, 2, 3, Σ
Power factor: 1, 2, 3, Σ
Frequency
Active energy incoming / outgoing: Σ
Reactive energy inductive / capacitive: Σ
Apparent energy: Σ
Active / reactive / apparent power intervals (demand)
Other demands
Harmonic contents: 2nd to 31st
Max. and min. values

■ **DISPLAY**: LCD with LED backlight
(LED OFF timer available)
Signed: 4 digits, 3 lines
Energy: 9 digits, 1 line
Bargraph: 3 points

INPUT

Frequency: 50 / 60 Hz (45 – 65 Hz)
• Voltage Input
Rated voltage
Line-to-line (delta voltage): 480V
Line-neutral (phase voltage): 277V
Consumption VA: ≤ U_{LN}^2 / 300kΩ / phase
Overload capacity: 200% of rating for 10 sec., 120% continuous
Selectable primary voltage range: 50 – 400 000 V

• Current Input
Rated current: 1A or 5A
Consumption VA: ≤ $I^2 \cdot 0.01\Omega$ / phase
Overload capacity: 4000% of rating for 1 sec., 2000% for 4 sec., 120% continuous
Selectable primary current range: 1 – 20 000 A

Operational range
Voltage, current, apparent power: ≤120% of the rating
Active/reactive power: ≤ ±120% of the rating
Frequency: 45 – 65 Hz
Power factor: ≤ ±1

■ **CONTACT INPUT**: 24V DC or 110V DC
(input resistance 6kΩ)
Contact detecting voltage: External 24V DC ±10% or 110V DC ±10%
ON current: ≥1mA (≤24kΩ @24V, ≤110kΩ @110V)
OFF current: ≤0.1mA (≥240kΩ @24V, ≥1.1MΩ @110V)
Contact detecting time: 10 – 1000 msec.
Contact status can be monitored on the Modbus; usable to reset energy count or to update average (demand) value

OUTPUT

■ **NETWORK INTERFACE**
Transmission: Half-duplex, asynchronous, no procedure
Interface: Conforms to EIA RS-485
Max. transmission distance: 500 meters
Baud rate: 1.2 – 38.4 kbps
Max. number of nodes: 31 (except the master)
Protocol: Modbus RTU
Media: Shielded twisted-pair cable (CPEV-S 0.9 dia.)

■ **DC CURRENT OUTPUT**: 4 – 20mA DC
Load resistance: 270Ω maximum**

■ **DC VOLTAGE OUTPUT**: 1 – 5V DC
Load resistance: 5000Ω minimum**
**Measurands converted into analog output: Voltage, Current, Active / reactive / apparent power, Power factor, Frequency, Harmonic contents

■ **OPEN COLLECTOR**
Programmable for either alarm or energy count.
Max. rated load: 130V DC @50mA
Continuous rated load: 130V DC @30mA
Saturation voltage: 1.5V DC
For maximum contact life and noise quenching with inductive loads, external protection is recommended.
Measurands applicable to alarm: Voltage, current, current intervals, neutral current, frequency, energy, energy intervals
(ON delay, deadband and other parameters are selectable)
Measurands applicable to count: Energy;
Pulse rate selectable within
0.1 – 10 000.0 kWh/p, kvarh/p, kVAh/p

INSTALLATION

Power input
AC: Operational voltage range 85 – 264V
47 – 66 Hz; <8VA
DC: Operational voltage range 99 – 264V
<4W; ripple 10% p-p max.
Operating temperature: -10 to +55°C (14 to 131°F)
Storage temperature: -20 to +80°C (-4 to +176°F)
Operating humidity: 90% RH max. (non-condensing)
Mounting: Panel flush mounting
Dimensions: W96×H96×D115 mm (3.78”×3.78”×4.53”)
Weight: 300 g (0.66 lbs)

PERFORMANCE

Accuracy (at 23°C ±10°C or 73.4°F ±18°F, 45 – 65 Hz)
- **Voltage**: ±0.3% (±0.2% for Option /H)***
- **Current**: ±0.3% (±0.2% for Option /H)***
- **Power**: ±0.5%***
- **Power factor**: ±0.5%
- **Frequency**: ±0.1%***
- **Energy**: ±1% (±0.5% for Option /H)
- **Harmonic contents**: ±1%***
- **Analog output**: Accuracy of assigned measurand or ±0.2%, whichever is greater.

Response time: ≤2 seconds (0 – 99%)
≤3 seconds for frequency and harmonic contents

Insulation resistance: ≥100MΩ with 500V DC
(voltage input to current input to contact input to network interface or configurator jack or analog output to contact output**** to power)

Dielectric strength: 4000V AC @1 minute
(voltage input or current input or contact input or network interface or configurator jack or analog output or contact output to power)
2500V AC @1 minute
(voltage input to current input to contact input to contact output to network interface or configurator jack or analog output)
2000V AC @1 minute (between each contact output except for External Interface code 8)

***In percentage of the spans: 480V for voltage, 1A or 5A for current, 4155W (5A) or 831W (1A) for active power. The described accuracy levels are ensured at the input 1% or more for phase 2 current with 3-phase/3-wire unbalanced load, and for neutral current with 3-phase/4-wire unbalanced load.

****Between each contact output except for External Interface code 8.

STANDARDS & APPROVALS

CE conformity: EMC Directive (2004/108/EC)
EN 61000-6-4 (EMI)
EN 61000-6-2 (EMS)
Low Voltage Directive (2006/95/EC)
EN 61010-1
Installation category III
Pollution degree 2

IEC standard: IEC 62053-22 class 0.5s
IEC 62053-23 class 2
(IEC standards are applicable with Option/H only)

FRONT & REAR VIEWS

■ FRONT VIEW

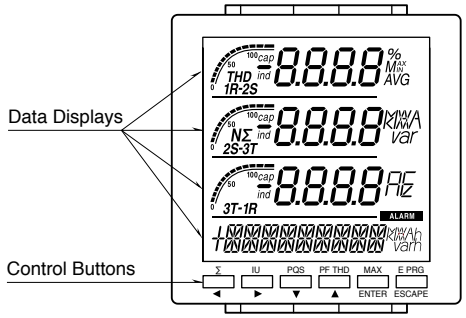

■ REAR VIEW

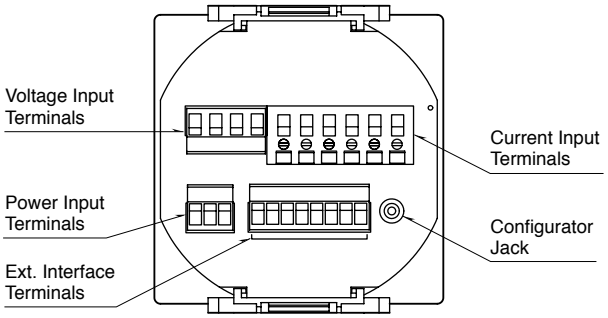

TERMINAL CONNECTIONS

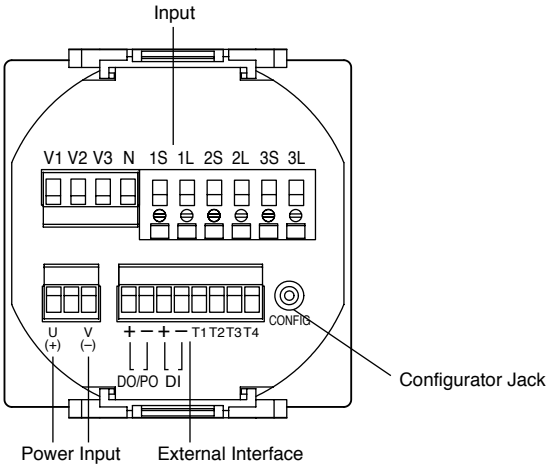

System / Application	Terminal
Single phase / 2-wire	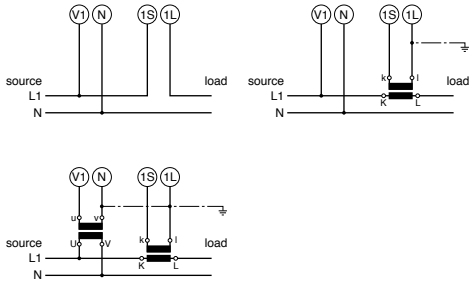
Three phase / 3-wire, balanced load	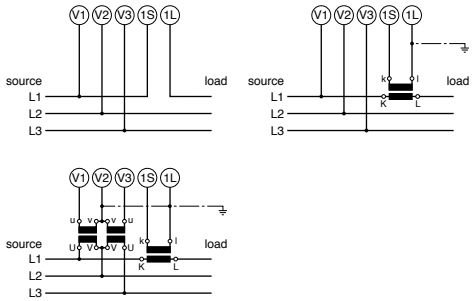
Single phase / 3-wire	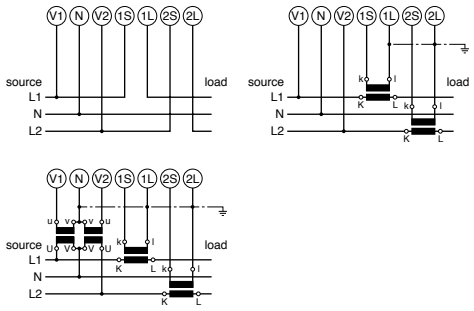

System / Application	Terminal
Three phase / 3-wire, unbalanced load	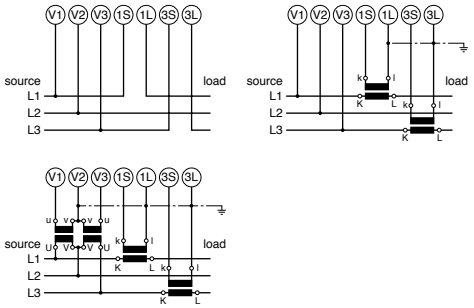
Three phase / 4-wire, balanced load	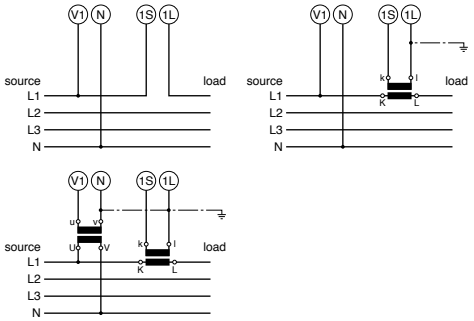
Three phase / 4-wire, unbalanced load	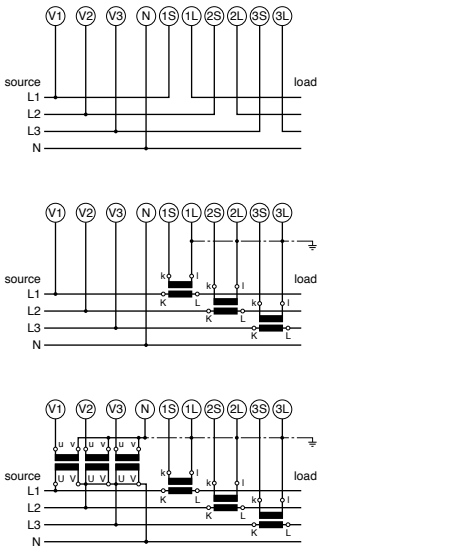

■ **EXTERNAL INTERFACE CODE: 1**

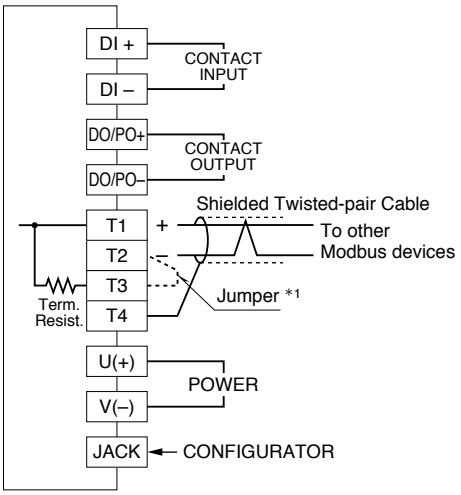

■ **EXTERNAL INTERFACE CODE: 2**

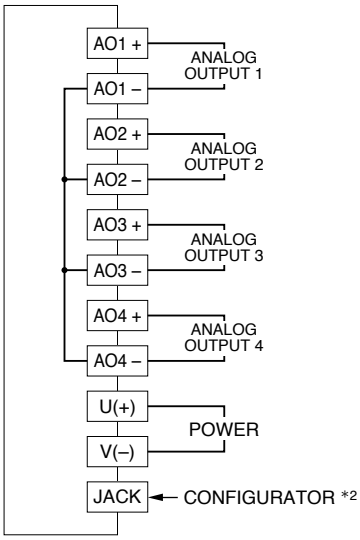

■ **EXTERNAL INTERFACE CODE: 4, 5**

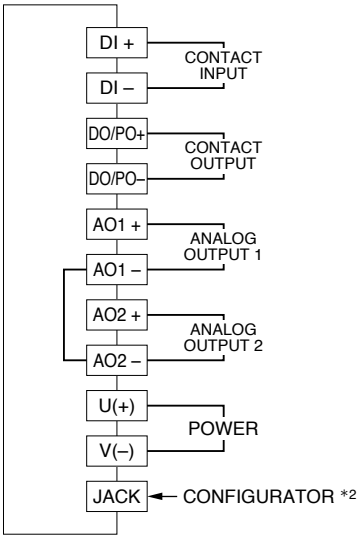

■ **EXTERNAL INTERFACE CODE: 6, 7**

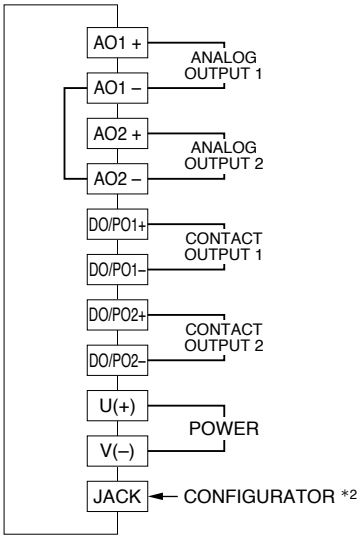

■ **EXTERNAL INTERFACE CODE: 8**

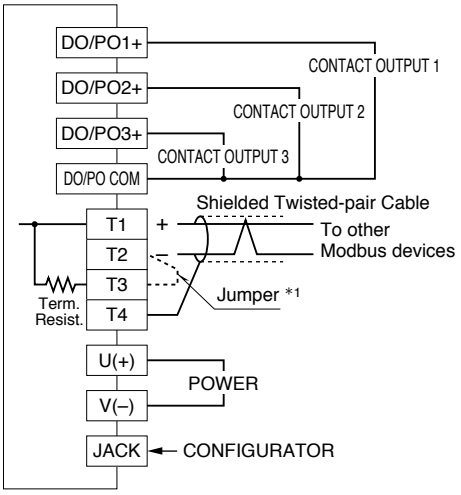

■ **EXTERNAL INTERFACE CODE: 9**

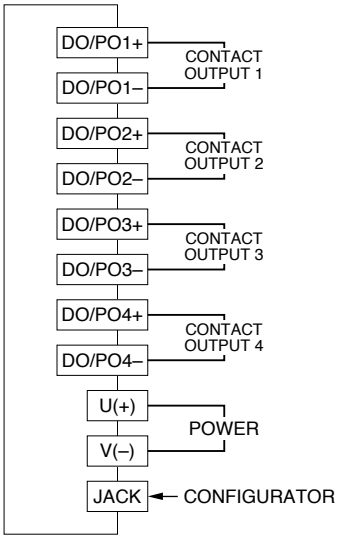

・**Contact Input Connection E.g.**

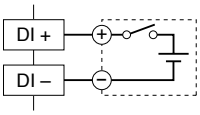

・**Contact Output Connection E.g.**

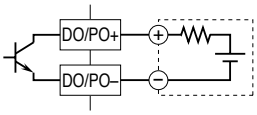

*1. When the device is located at the end of a transmission line via twisted-pair cable, (when there is no cross-wiring), close across the terminal T2 – T3 with a leadwire.
When the device is not at the end, no shortcircuit wire is required.

*2. Analog output may momentarily fluctuate while the configurator cable is left connected.

MODBUS WIRING CONNECTION

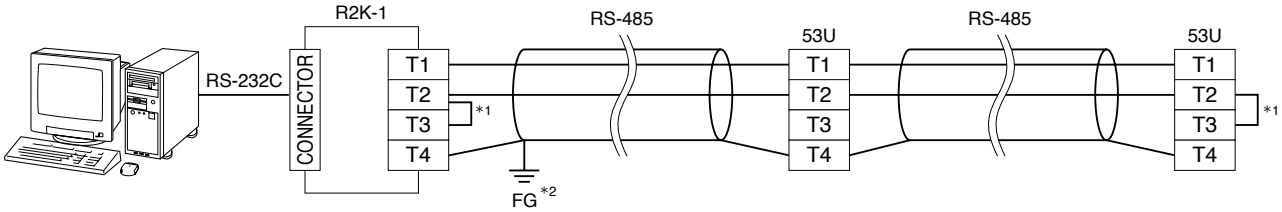

*1. Internal terminating resistor is used when the device is at the end of a transmission line.
*2. Install shield cables to all sections and ground them at single point.

EXTERNAL DIMENSIONS unit: mm (inch)

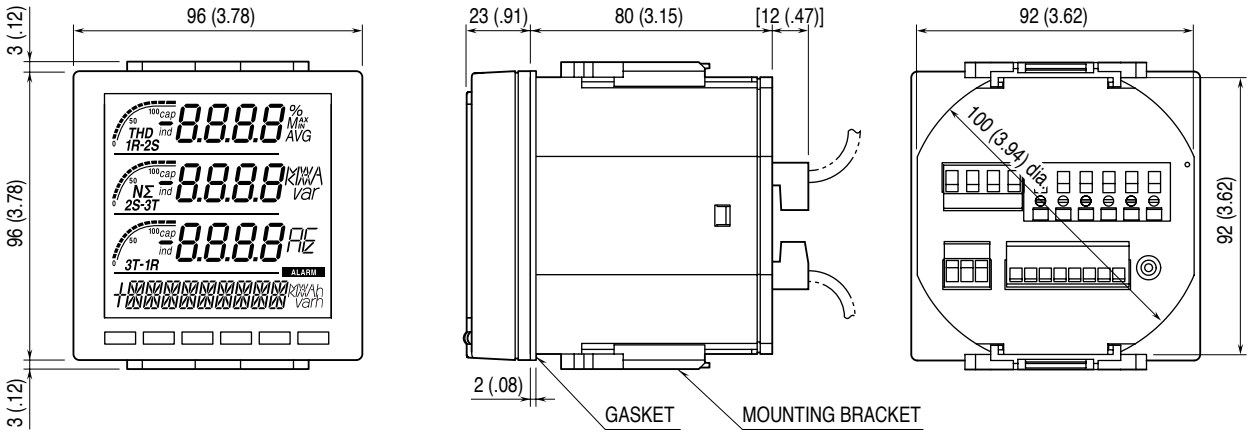

MOUNTING REQUIREMENTS

■ **PANEL CUTOUT unit: mm (inch)**

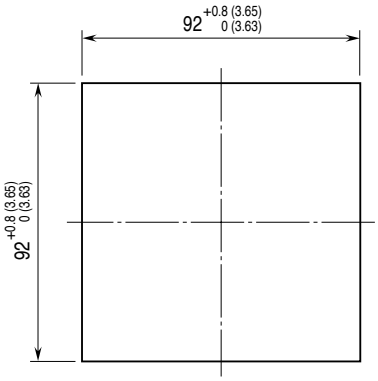

Panel thickness : 2 to 15 mm (0.08 to 0.59 inch)

SYSTEM CONFIGURATION EXAMPLES

■ **RS-485 / RS-232C**

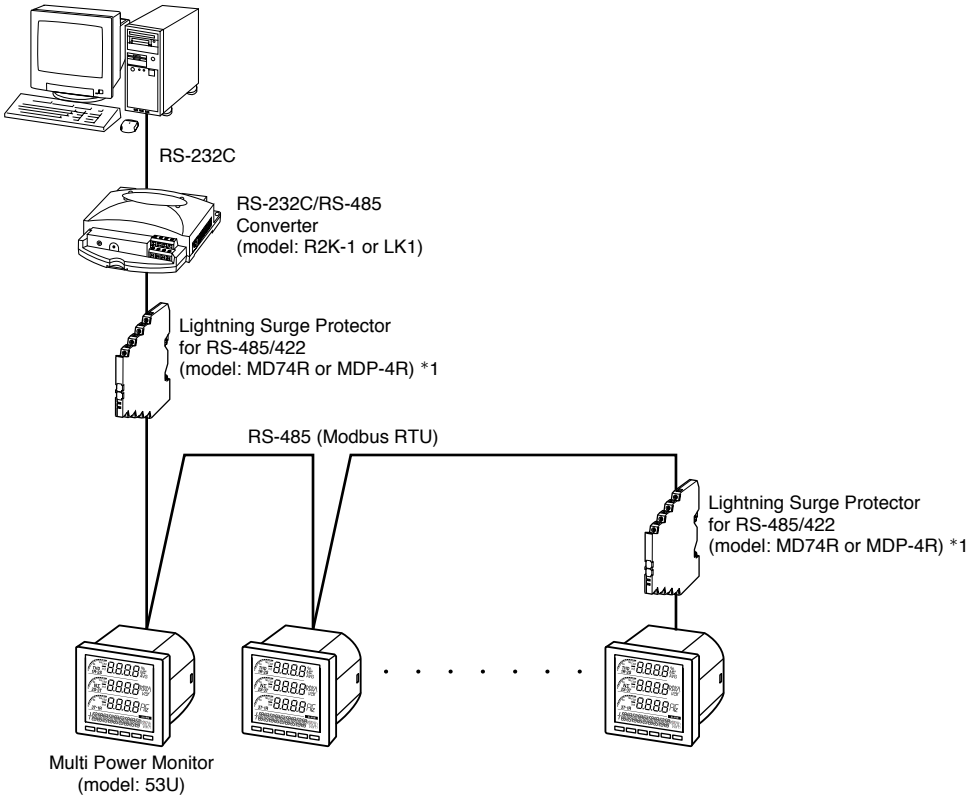

■ **RS-485 / ETHERNET**

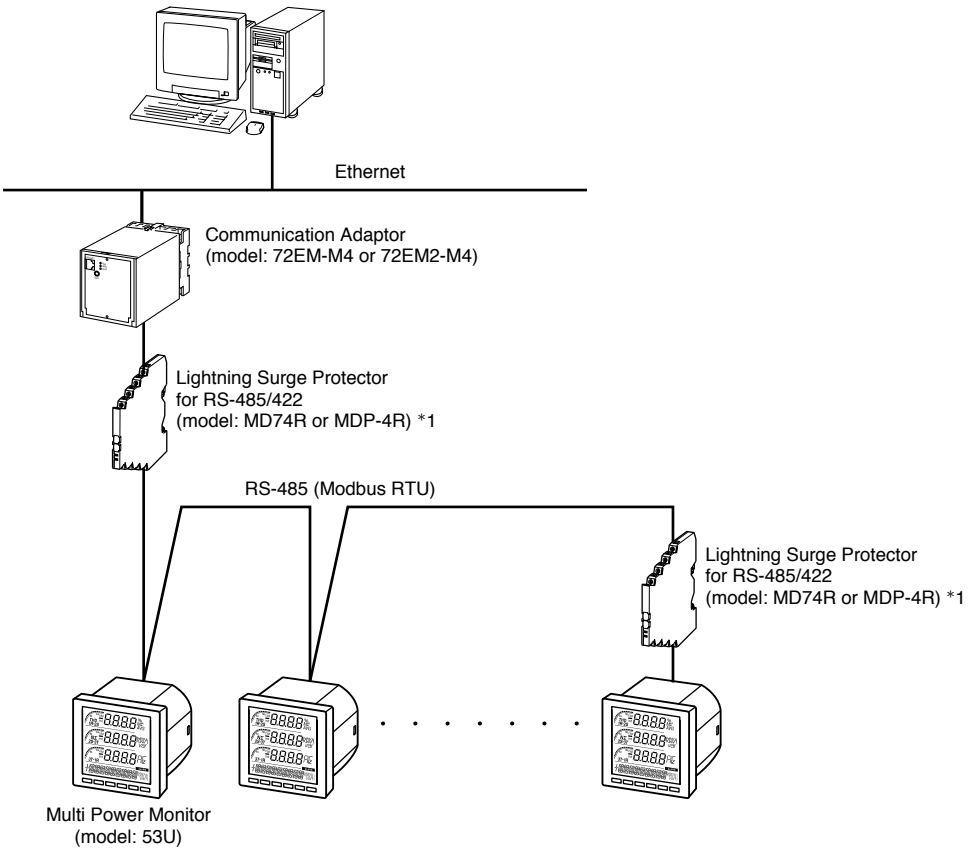

*1. Insert lightning surge protectors recommended in this example if necessary.