Head-mounted Two-wire Signal Conditioners *27-UNIT*

2-WIRE UNIVERSAL TEMPERATURE TRANSMITTER (HART communication)

MODEL **27HU**

MODEL & SUFFIX CODE SELECTION

27HU–❑❑

MODEL

SAFETY APPROVAL
0 : None
1 : FM intrinsically safe
2 : CENELEC intrinsically safe (ATEX)

OPTIONS
/L : Ultra-low temperature drift

ORDERING INFORMATION

Specify code number and suffix codes. Use Ordering Information Sheet (No. ESU-7651). Factory standard setting will be used if not otherwise specified.
Specify the country in which the product is to be used with the Safety Approval code 2.
• Code number (e.g. 27HU-2)

RELATED PRODUCTS

• RS-232C interface Bell202 modem (model: COP-H)*
• USB interface Bell202 modem (model: COP-HU)*
• Hand-held communicator
• PC configurator software (model: 27HUCFG)
Downloadable at M-System's web site:
http://www.m-system.co.jp
*Usable in 'non-hazardous' area only.

GENERAL SPECIFICATIONS

Electrical connection: M3 screw terminals (nickel-plated brass; torque 0.5 N·m)
Housing material: Flame-resistant resin (black)
Isolation: Input to output
User-configurable parameters:
· Input sensor type and numbers
· Number of wires (RTD & resistance)
· Input range (inverted range selectable)
· Burnout
· Output limits (Upper / Lower)
· Damping time
· Cold junction compensation (T/C; internal or external sensor selectable)
· Linearization
· Sensor calibration
· Output calibration
· HART communication mode
Damping time: 0 to 30 sec. (factory set to: 0)

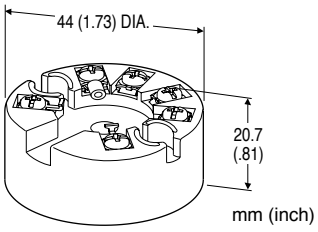

Functions & Features
• Universal input: mV, T/C, RTD and resistance
• High accuracy
• HART communication
• Intrinsically safe approval
• CE marking (conforms to ATEX and EMC)
• Suitable for Functional Safety applications up to SIL2
• Programming via hand-held communicator or via PC
• A wide variety of T/C and RTD types
• User's temperature table can be used
• Self diagnostics
• Ultra-low temp. drift option (20 ppm/°C typ.)

HART COMMUNICATION

Protocol: HART communication protocol
HART address range: 0 – 15 (factory set to: 0)
Transmission speed: 1200 bps
Digital current: Approx. 1mA p-p when communicating
Character format: 1 Start Bit, 8 Data Bits, 1 Odd Parity Bit, 1 Stop Bit
Distance: 1.5 kilometers (0.9 mile)
HART communication mode: Master-Slave Mode and Burst Mode (factory set to: Master-Slave)
HART network mode: Point-to-Point Mode and Multi-drop Mode; automatically set to Multi-drop Mode when the address is set to other than 0.

INPUT

The input is factory set for use with K thermocouple, single input, 0 to 100°C, internal CJC sensor.
See Table 1 for the available input type, the minimum span and the maximum range.

■ DC mV (dual input available)
Input resistance: 1MΩ minimum

■ THERMOCOUPLE (dual input available)
Input resistance: 1MΩ minimum
Burnout sensing: 33μA
External CJC sensor type: Pt 100

■ RTD & RESISTANCE (2-wire, 3-wire or 4-wire)
Input resistance: 1MΩ minimum
Excitation: 0.2mA
Allowable leadwire resistance: Max. 10Ω per wire

OUTPUT

Output range: 4 – 20mA DC
Operational range: 3.75 – 23mA
Burnout: 3.75 – 3.8mA or 21.5 – 23mA (factory set to: 23mA)
Upper output limit proportional to the input: 20 – 21.5mA (factory set to: 21.5mA)
Lower output limit proportional to the input: 3.8 – 4mA (factory set to: 3.8mA)
Update time: 440 msec. (660 msec. with dual input)
Output characteristics for dual input: Average or Differential selectable
Load resistance vs. supply voltage:

$$\text{Load Resistance } (\Omega) = \frac{\text{Supply Voltage (V)} - 8\text{ (V)}}{0.023\text{ (A)}}$$

(including leadwire resistance)

INSTALLATION

Supply voltage: 8 – 35V DC (non-approved)
8 – 28V DC (approved)
Operating temperature: -40 to +85°C (-40 to +185°F)
(See Safety Parameters for use in a hazardous location.)
Operating humidity: 0 to 95% RH (non-condensing)
Mounting: Head-mounting (DIN type B head)
Dimensions: 44 dia. × 20.7 mm (1.732 dia. × 0.81")
Weight: 50 g (1.76 oz)

PERFORMANCE

Accuracy: See Table 1.
Cold junction compensation accuracy: ≤ ±0.5°C with internal CJC sensor
Temp. coefficient:
Option /L 0.002%/°C typ.
0.005%/°C max.
w/o Option/L 0.015%/°C
Response time: ≤2 seconds (0 – 90%) with damping time set to 0 and when not communicating via HART.
Supply voltage effect: ≤ ±0.005% of span/V
Insulation resistance: ≥100MΩ with 500V DC (input to output)
Dielectric strength: 1500V AC @1 minute (input to output)
Safety integrity level according to IEC 61508:
Suitable for use in a safety instrumented system up to SIL2 (together with sensor) if appropriate safety instructions are observed. Consult M-System.

STANDARDS & APPROVALS

CE conformity: ATEX Directive (94/9/EC)
Ex ia EN 60079-11
EMC Directive (2004/108/EC)
EMI EN 61000-6-4
EMS EN 61000-6-2
Safety approval
FM: Intrinsically safe
Class I, Div. 1, Groups A, B, C and D
Class I, Zone 0, AEx ia IIC (US)
Class I, Zone 0, Ex ia IIC (Canada)
T4, T5 and T6
(Class 3610, ANSI/ISA 60079-11, CAN/CSA-C22.2 No. 157, CAN/CSA-C22.2 No. 60079-11)
CENELEC: Intrinsically safe (ATEX)
Ⓔx II 1G, Ex ia IIC; T4, T5 and T6
(EN 60079-11 : 2007)

SAFETY PARAMETERS

Operating temperature for CENELEC (ATEX) / FM:
T4 -40 to +80°C
T5 -40 to +60°C
T6 -40 to +45°C

Ex-data:

Ui (Vmax)	30V DC	Uo (Voc)	30V DC
Ii (Imax)	96mA DC	Io (Isc)	24mA DC
Pi (Pmax)	720mW	Po	180mW
Ci	1 nF	Co (Ca)	50 nF
Li	0 mH	Lo (La)	40 mH

MOUNTING REQUIREMENTS mm (inch)

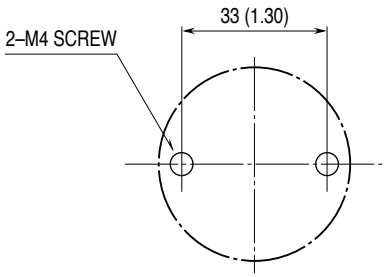

EXTERNAL DIMENSIONS & TERMINAL ASSIGNMENTS mm (inch)

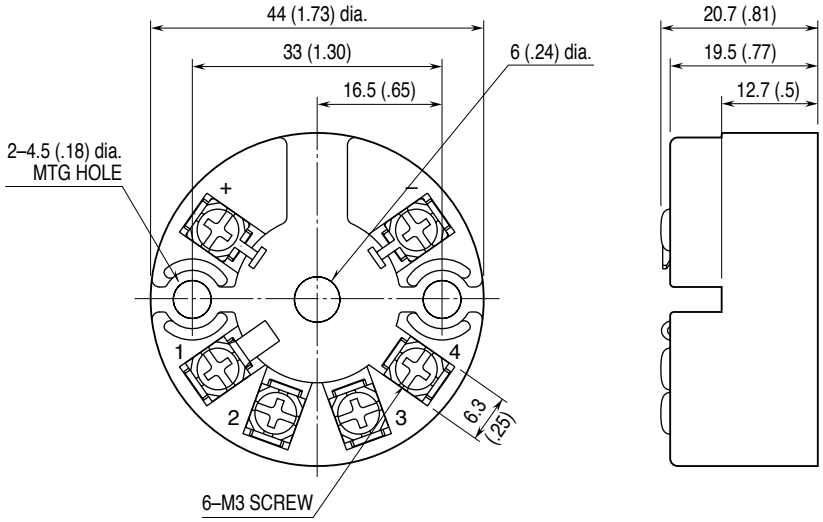

INPUT TYPE, RANGE & ACCURACY

■ **INPUT TYPE, RANGE & ACCURACY** **Table 1**

INPUT TYPE	MINIMUM SPAN	MAXIMUM RANGE	ACCURACY *1	TEMPERATURE DRIFT STANDARD DRIFT*2	TEMPERATURE DRIFT ULTRA-LOW DRIFT*3
DC mV	4mV	-100 to +800mV	±10µV	±1.5µV/°C	±0.5µV/°C
Resistance	25Ω	0 to 4kΩ	±0.1Ω	±15mΩ/°C	±5mΩ/°C

Thermocouple	°C MINIMUM SPAN	°C MAXIMUM RANGE	°C ACCURACY *1	°F MINIMUM SPAN	°F MAXIMUM RANGE	°F ACCURACY *1	TEMPERATURE DRIFT STANDARD DRIFT*2	TEMPERATURE DRIFT ULTRA-LOW DRIFT*3
K (CA)	50	-180 to +1372	±0.5	90	-292 to +2501	±0.9	±0.075°C/°C	±0.025°C/°C
E (CRC)	50	-100 to +1000	±0.5	90	-148 to +1832	±0.9	±0.075°C/°C	±0.025°C/°C
J (IC)	50	-100 to +1200	±0.5	90	-148 to +2192	±0.9	±0.075°C/°C	±0.025°C/°C
T (CC)	50	-200 to +400	±0.5	90	-328 to +752	±0.9	±0.075°C/°C	±0.025°C/°C
B (RH)	100	400 to 1820	±1	180	752 to 3308	±1.8	±0.3°C/°C	±0.1°C/°C
R	100	-50 to +1760*4	±1	180	-58 to +3200*4	±1.8	±0.3°C/°C	±0.1°C/°C
S	100	-50 to +1760*4	±1	180	-58 to +3200*4	±1.8	±0.3°C/°C	±0.1°C/°C
C (WRe 5-26)	100	0 to 2300	±1	180	32 to 4172	±1.8	±0.3°C/°C	±0.1°C/°C
D (WRe 3-25)	100	0 to 2300	±1	180	32 to 4172	±1.8	±0.3°C/°C	±0.1°C/°C
N	50	-180 to +1300	±0.5	90	-292 to +2372	±0.9	±0.075°C/°C	±0.025°C/°C
U	50	-200 to +600	±0.5	90	-328 to +1112	±0.9	±0.075°C/°C	±0.025°C/°C
L	50	-100 to +900	±0.5	90	-148 to +1652	±0.9	±0.075°C/°C	±0.025°C/°C

RTD	°C MINIMUM SPAN	°C MAXIMUM RANGE	°C ACCURACY *1	°F MINIMUM SPAN	°F MAXIMUM RANGE	°F ACCURACY *1	TEMPERATURE DRIFT STANDARD DRIFT*2	TEMPERATURE DRIFT ULTRA-LOW DRIFT*3
Pt 100 (JIS'97, IEC)	10	-200 to +850	±0.1	18	-328 to +1562	±0.18	±0.015°C/°C	±0.005°C/°C
Pt 200	10	-200 to +850	±0.1	18	-328 to +1562	±0.18	±0.015°C/°C	±0.005°C/°C
Pt 500	10	-200 to +850	±0.1	18	-328 to +1562	±0.18	±0.015°C/°C	±0.005°C/°C
Pt 1000	10	-200 to +850	±0.1	18	-328 to +1562	±0.18	±0.015°C/°C	±0.005°C/°C
JPt 100 (JIS '89)	10	-200 to +510	±0.1	18	-328 to +950	±0.18	±0.015°C/°C	±0.005°C/°C
Ni 100 (DIN43760 '87)	10	-60 to +250	±0.2	18	-76 to +482	±0.36	±0.015°C/°C	±0.005°C/°C

*1. DC mV: Or ±0.05% of absolute range (greater of 0% and 100% range values), whichever is greater.
Or ±0.2% of absolute negative range for two inputs including negative ranges, whichever is greater.
Resistance: Or ±0.05% of absolute range (greater of 0% and 100% range values), whichever is greater.
Thermocouple: Or ±0.05% of span, whichever is greater. Add cold junction compensation error.
RTD: Or ±0.05% of max. range (greater of 0% and 100% range values converted into °C), whichever is greater.
(For 2- or 3-wire RTD, the value is valid by the sensor calibration after wiring is complete.)
*2. Or ±0.015% of absolute range/°C (greater of 0% and 100% range values), whichever is greater.
*3. Or ±0.005% of absolute range/°C (greater of 0% and 100% range values), whichever is greater.
*4. Conformance range: 50 to 1760°C or 122 to 3200°F

SCHEMATIC CIRCUITRY & CONNECTION DIAGRAM

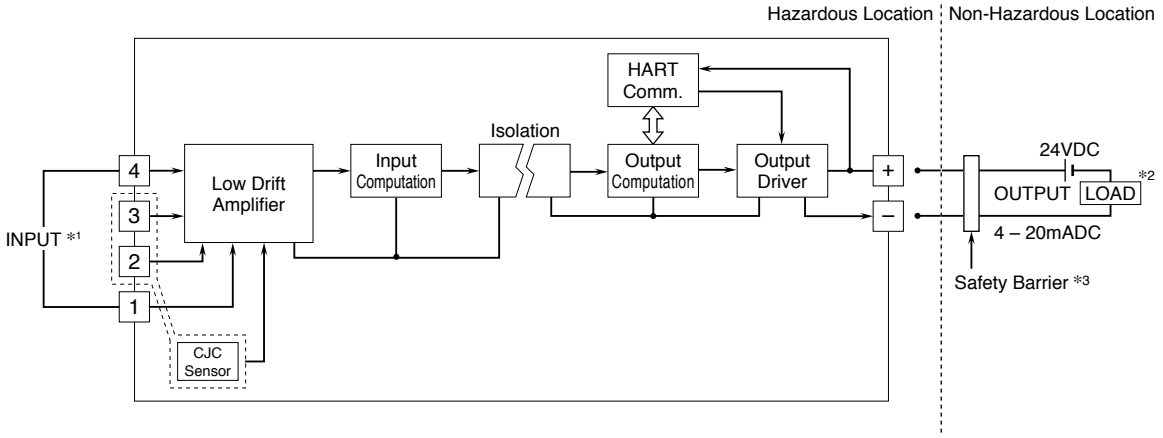

***1. Input Connection Examples**

■ DC MILLIVOLT

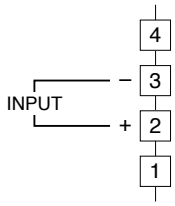

■ THEMOCOUPLE

• Internal CJC

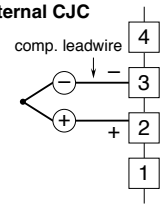

■ RTD & RESISTANCE

• Two-wire

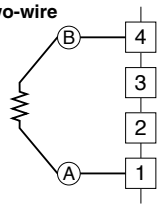

• Two Inputs

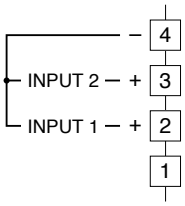

• External CJC

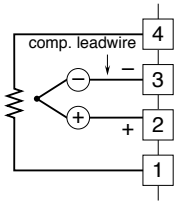

• Three-wire

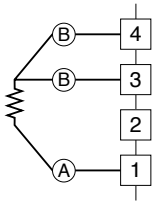

• Two Inputs, Internal CJC

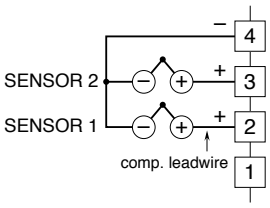

• Four-wire

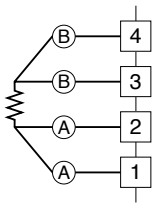

• Two Inputs, External CJC

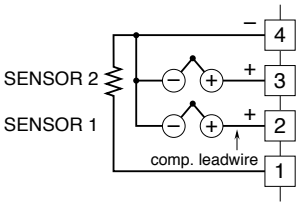

*2. Limited to 250 – 1100Ω for HART communication.
*3. A safety barrier must be installed for the intrinsic safety.
The safety barrier must meet the Ex-data of this unit and must be approved for the hazardous location.